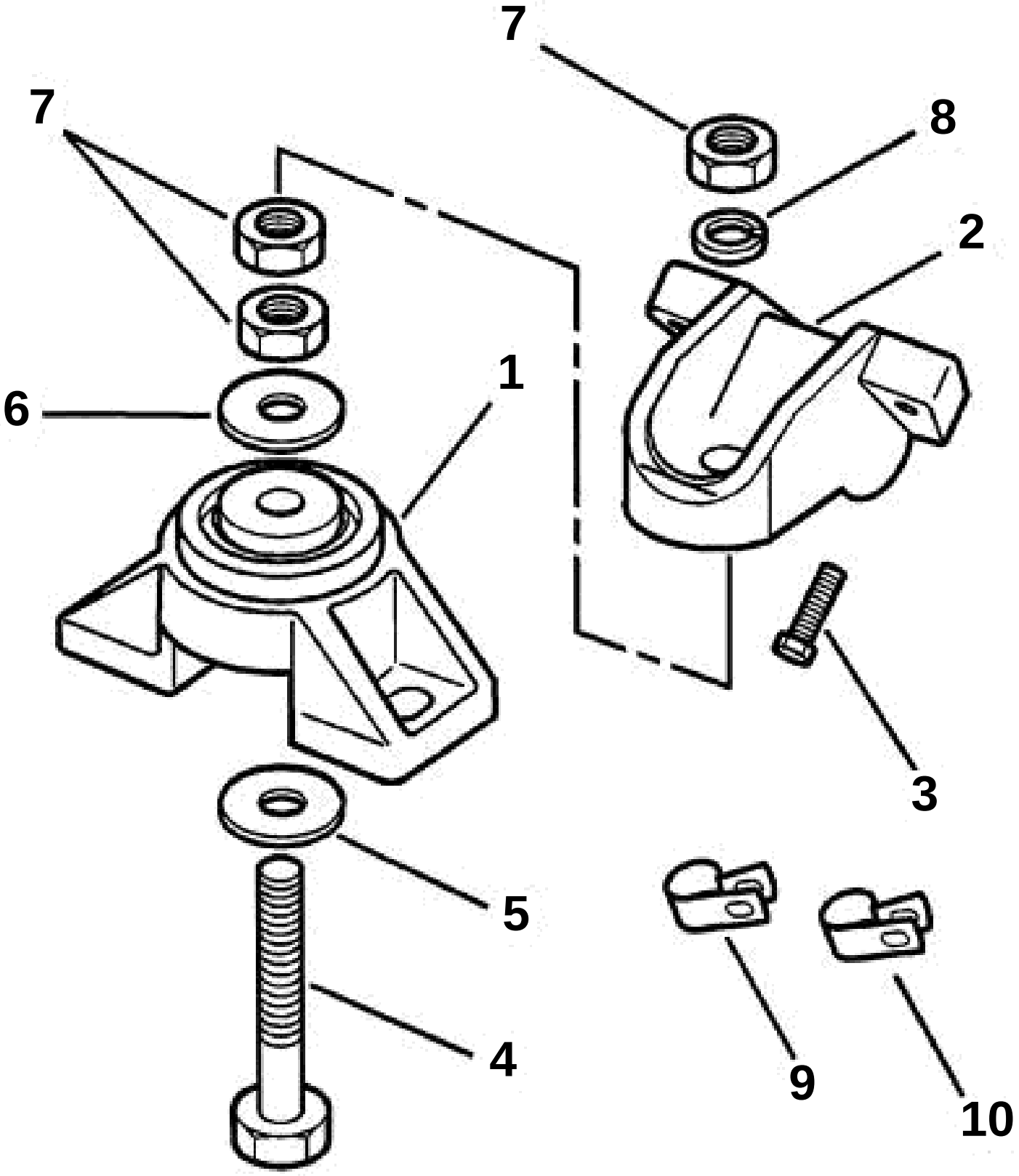
7
7
8
2
1
6
3
5
4
9
10

ENGINE MOUNTS

REF	PART NO.	QTY	DESCRIPTION	NOTES
1	3853805	2	Rubber cushion, Engine front	Port & starboard
2	3852760	2	Bracket, Front, port & starboard	
3	3853326	6	Screw, Front mount bracket to engine	
4	3852566	2	Screw, Front mount	Front
5	3852428	2	Washer, Front mount	Lower
6	3852433	2	Washer, Front mount	Upper
7	3852021	6	Nut, Bolt, mount bracket	Front
8	3852090	2	Lock washer, Bolt, front mount, engine	
9	3852146	1	Clamp, Starter leads to stbd bracket	
10	3853312	1	Clamp, Hose to mount	[Stbd